PRODUCT SPECIFICATION · O-RING, AS568 -016

Viton O-Ring, .614 x .754 x .070

HMSC PART NUMBER
T9E01H1S
Replaces Nordson® 940161

Viton O-ring, AS568 size -016 (.614 x .754 x .070 in). Temperature rating -15°F to 400°F (-26°C to 204°C). Replaces Nordson 940161.

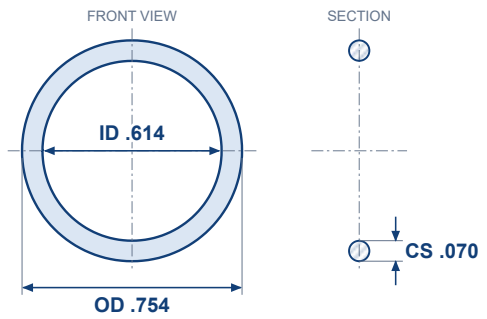

Not to scale. Sizes in inches.

Specifications

Part type	O-ring
Material	Viton
Temperature rating	-15°F to 400°F (-26°C to 204°C)
Hardness	75A durometer
Inside diameter	.614 in
Outside diameter	.754 in
Cross section	.070 in
AS568 size	-016
Replaces Nordson	940161

Replace every seal you disturb, and use high temperature O-ring lubricant on assembly.

Relieve system pressure and let the equipment cool before opening the hydraulic system. Hot melt and heated parts cause burns.

Product page

Nordson is a registered trademark of Nordson Corporation. Hot Melt Supply Company is not affiliated with Nordson Corporation. Part numbers are used for identification only. Viton is a registered trademark of The Chemours Company. Specifications are for identification and service reference. Always follow the equipment manual.