PRODUCT SPECIFICATION · INLINE FILTER

Inline Filter, 200 Mesh, 90 Degree

Code G9, 200 mesh, 90 degree fitting

HMSC PART NUMBER
T10P72C2S
Replaces Nordson® 1007232

Inline filter for the hose connection on H200 and MiniBlue (MB2) guns, 200 mesh on a 90 degree fitting. It is code G9 in field 10 of the gun configuration code.

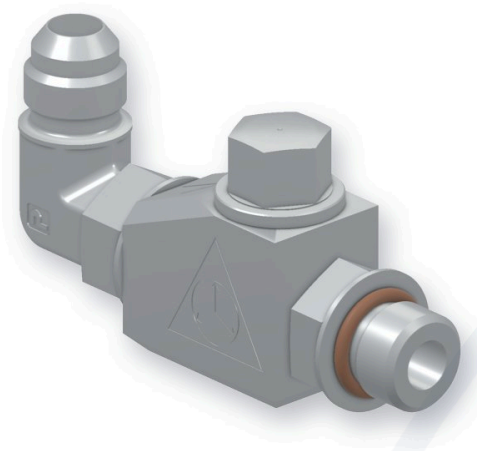

90 degree inline filter

Specifications

Type	Inline filter (hydraulic connector)
Mesh	200 mesh
Fitting angle	90 degree
Fits	H200 and MiniBlue (MB2) guns, at the hose connection
Not for	Slim line guns (they use integrated filter element T11B36H3S)
Gun configuration code	G9 (code field 10)
HMSC gun part number	Filter digits 33 (200 mesh, 90 degree)
Replaces Nordson	1007232

Inline filter selection

Mesh	Straight (0)	45 degree (4)	90 degree (9)
50 mesh (E)	T10P70C3S Nordson 1007033	T10P72C3S Nordson 1007233	T10P72C0S Nordson 1007230
100 mesh (F)	T10P70C4S Nordson 1007034	T10P72C4S Nordson 1007234	T10P72C1S Nordson 1007231
200 mesh (G)	T10P70C5S Nordson 1007035	T10P72C5S Nordson 1007235	**T10P72C2S** Nordson 1007232

Code field 10: the letter is the mesh (E 50, F 100, G 200), the digit is the fitting angle (0 straight, 4 45 degree, 9 90 degree). N0 is no filter.

Used on 1 Quick Ship gun

1 H200 gun. Nordson numbers:

8515851

Use and service

- To identify it, look at the hose fitting angle and the filter size stamped on it.
- Use inline hose filters or filtered modules on small orifices (.008 and .012).
- After a melter flush, purge the hoses with the inline filters removed, then install new filters.
- Ball and seat (filtered) modules T10F29B5S-F100 and T10F29B5S-F200, and every H200 NC² module, have a 100 or 200 mesh filter just ahead of the nozzle.

Hot melt, heated parts and adhesive under pressure cause burns. Wear heat resistant gloves, safety glasses and long sleeves. Relieve system pressure before opening any fitting, filter, module or nozzle.

Product page

Nordson is a registered trademark of Nordson Corporation. Hot Melt Supply Company is not affiliated with Nordson Corporation. Part numbers are used for identification only. MiniBlue and other Nordson product names are trademarks of Nordson Corporation. Specifications are for identification and service reference. Always follow the equipment manual.