PRODUCT SPECIFICATION · BUTTON NOZZLE

Button Nozzle, Dual 60°, .016 Orifice

HMSC PART NUMBER
HMS-N-238524
Replaces Nordson® 238524

Domed button nozzle with 2 orifices, 60 degrees apart, .016 in orifice. Fits all H200 modules.

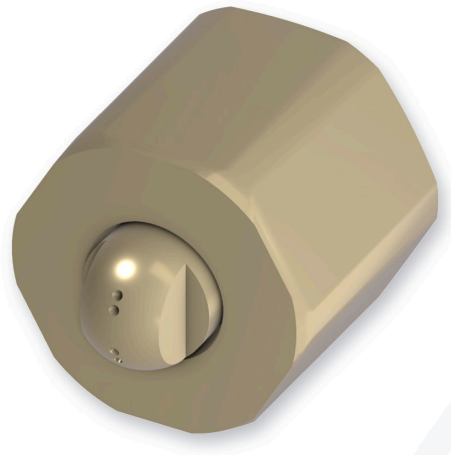

Standard button body, typical. Orifice layout varies by pattern.

Specifications

Nozzle type	Button (domed)
Pattern	Dual 60°
Orifices	2 orifices, 60 degrees apart
Stream angles	±30° from the centerline
Orifice diameter	.016 in
Orifice tolerance	±.0005 in
Material	Phosphor brass
Fits	All H200 modules
Store SKU	T2C85B4S

Spray pattern

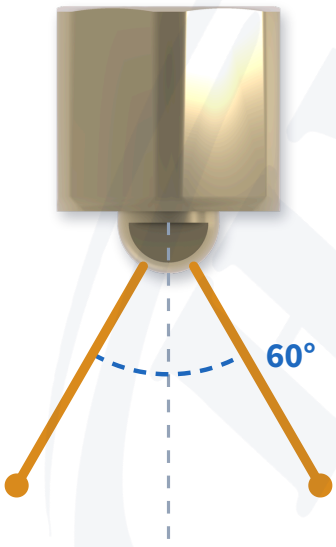

Dual 60°, side view shooting down, drawn to the chart angles.

About button nozzles

- Button nozzles are one piece, precision drilled brass with no insert.
- Precision drilled holes shoot straighter.

Product page

Nordson is a registered trademark of Nordson Corporation. Hot Melt Supply Company is not affiliated with Nordson Corporation. Part numbers are used for identification only. Specifications are for identification and service reference. Always follow the equipment manual.